Figure 320A
STAINLESS STEEL BALL VALVES

3 PC FULL PORT 2000 CWP

Features:

- 2000 PSI CWP* Non-Shock
- Working Steam Pressure (WSP)
  - 150 PSI - Fig. 320A
  - 250 PSI - Fig. 320AC
- Full Port
- Blow-out Proof Stem
- Live-Loaded Packing
- Anti-static Design
- Investment Cast Body
- TFM (Super TFE) Seats
- End Connections
  - Threaded
  - Socket Weld
- Stainless Steel Handle
- Locking Lever
- Tapped Hole Mounting Pad
- Vacuum rated to 26.967"Hg (75 Torr)**
- Vented Ball
- Manufactured Silicone Free

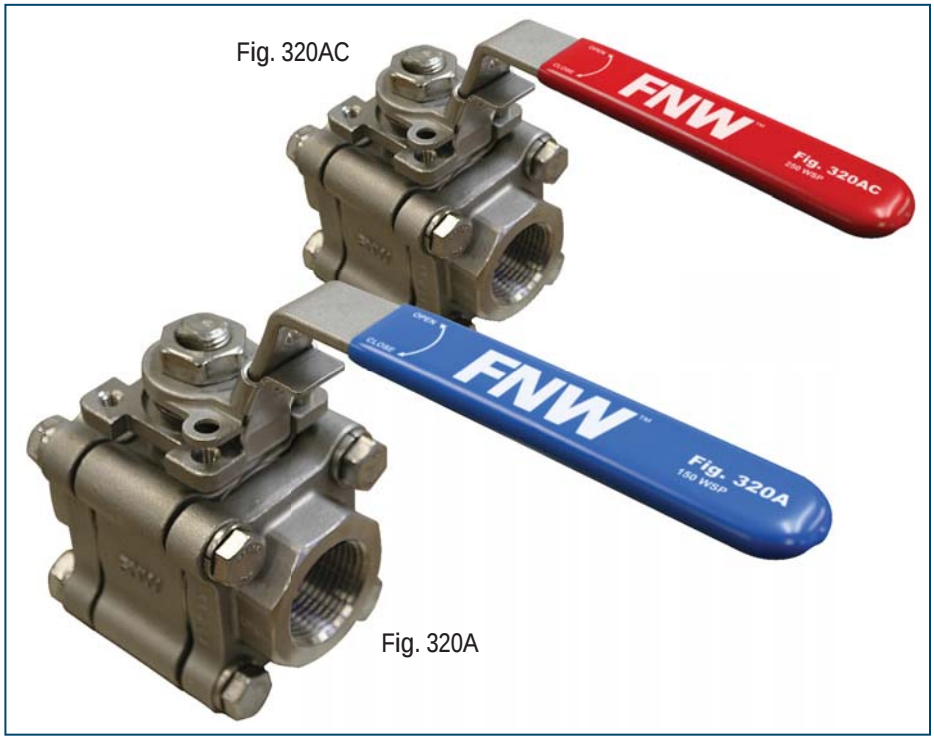

Standards:

- Design: ASME B16.34, MSS SP-110
- End Connections:
  - NPT - ASME B1.20.1
  - SW - ASME B16.11
- Seat/Shell Test: MSS SP-110

* 1/4" to 1" - 2000 PSI CWP
1-1/4" to 2" - 1500 PSI CWP

** Vacuum measurements are often made in inches of mercury below atmospheric pressure. The values calculated here assume standard atmospheric pressure of 29.92 inches of mercury.

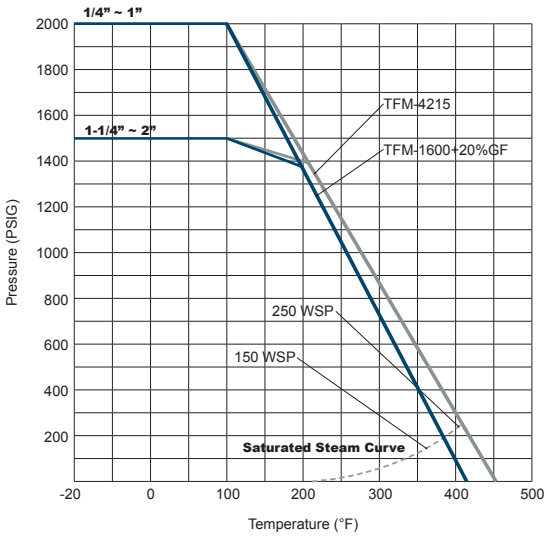

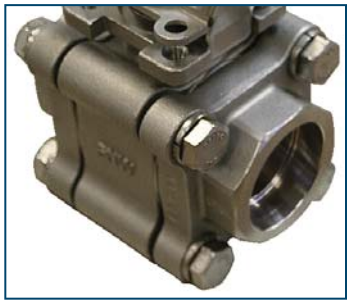

Optional Socket Weld Ends

Cv, Torque & Weight

Size	Cv	Torque (in-lbs)	Wt (lbs)	
			NPT	SW
1/4	15	69	2.34	2.34
3/8	15	69	2.34	2.34
1/2	18	77	2.29	2.25
3/4	36	98	3.15	3.15
1	48	166	4.59	4.59
1-1/4	58	277	7.61	7.61
1-1/2	120	388	9.92	9.92
2	190	582	15.21	15.48

Figure Number Matrix

FNW 320A Seat/Seals Ends Size

SEAT/SEAL CODE	END CODE	SIZE CODE	
Blank = Standard Temp (150 WSP)	Blank = Threaded NPT	1/4 = B	1 = G
C = High Temp (250 WSP)	SW = Socket Weld	3/8 = C	1-1/4 = H
		1/2 = D	1-1/2 = J
		3/4 = F	2 = K

3 PC FULL PORT 2000 CWP

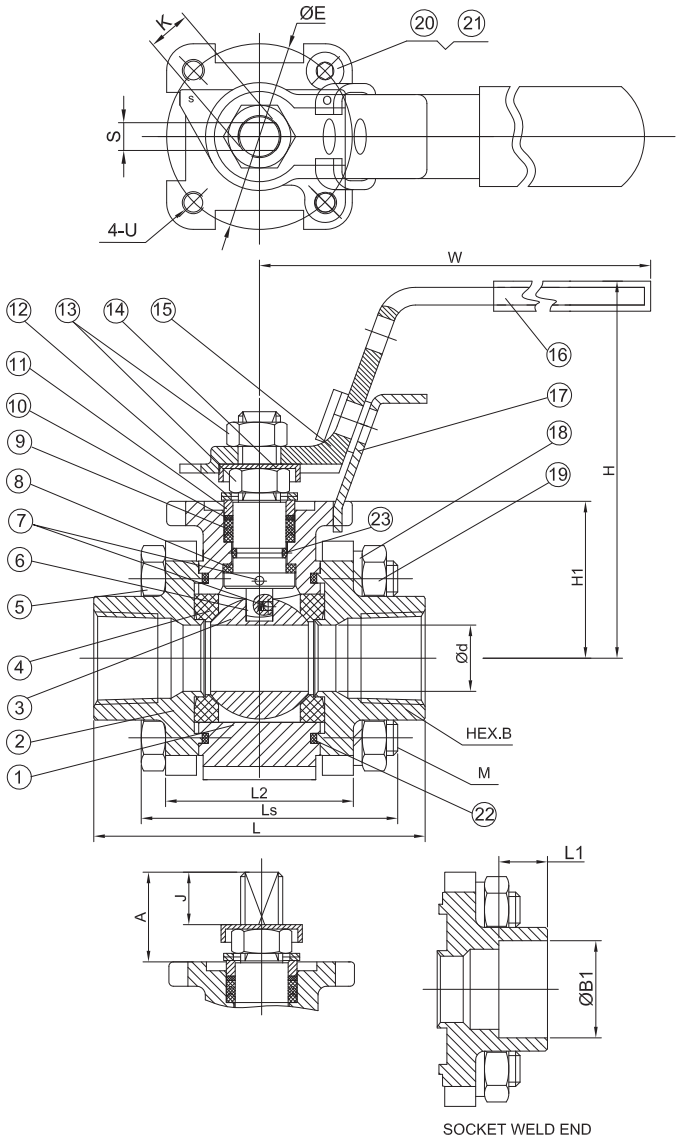

Standard Materials

Ref. No.	Description		Material: Figure 320A	Material: Figure 320AC	Qty
1	Body		ASTM A351 Gr. CF8M Stainless		1
2	End Cap	NPT	ASTM A351 Gr. CF8M Stainless		2
		SW	ASTM A351 Gr. CF3M Stainless		
3	Ball		316SS Stainless		1
4	Seat		TFM1600+20%GF	TFM4215	2
5	Body Bolt	1/4~1-1/4	ASTM A193-B8 Stainless		4
		1-1/2~2			8
6	Stem		316SS Stainless		1
7	Anti-Static Device		316SS Stainless		2
8	Thrust Washer		TFM4215		1
9	V-Ring Packing		PTFE	TFM1600	1 Set
10	Bushing		50% Stainless + 50% PTFE		1
11	Gland		316SS Stainless		1
12	Belleville Washer		301SS Stainless		2
13	Stem Nut		ASTM A194-8 Stainless		2
14	Stop-Lock-Cap		304SS Stainless		1
15	Handle		304SS Stainless		1
16	Handle Sleeve		Vinyl Plastic		1
17	Lock Device		304SS Stainless		1
18	Bolt Washer	1/4~1-1/4	304SS Stainless		4
		1-1/2~2			8
19	Bolt Nut	1/4~1-1/4	ASTM A194-8 Stainless		4
20	Stop Bolt		ASTM A193-B8 Stainless		1
21	Stop Washer		304SS Stainless		1
22	Body Gasket		PTFE	PTFE+20%CF	2
23	O-Ring		FKM		1

Dimensions (inches)

SIZE	Ød	L	H1	H	W	ØE	S	U	A	J	K (UNF)	Ls	L2	M (UNC)	B	L1	ØB1
1/4	0.42	2.76	1.18	2.99	5.31	1.65	0.25	M5	0.68	0.41	3/8-24	2.13	1.61	1/4-20	0.93	0.43	0.55
3/8	0.50	2.76	1.18	2.99	5.31	1.65	0.25	M5	0.68	0.41	3/8-24	2.13	1.61	1/4-20	0.93	0.43	0.71
1/2	0.59	2.95	1.42	3.27	5.31	1.65	0.25	M5	0.80	0.46	3/8-24	2.44	1.83	5/16-18	1.10	0.43	0.87
3/4	0.79	3.15	1.56	3.27	5.31	1.65	0.25	M5	0.80	0.46	3/8-24	2.74	2.05	3/8-16	1.34	0.51	1.08
1	0.98	3.54	1.79	3.86	6.69	1.97	0.35	M6	0.92	0.49	9/16-18	3.18	2.36	3/8-16	1.81	0.51	1.36
1-1/4	1.25	4.33	1.97	4.06	6.69	1.97	0.35	M6	0.92	0.49	9/16-18	3.86	2.76	1/2-13	2.17	0.51	1.69
1-1/2	1.50	4.72	2.36	4.33	7.87	2.76	0.38	M8	1.18	0.59	5/8-18	4.12	3.24	1/2-13	2.24	0.51	1.91
2	1.95	5.51	2.68	4.69	7.87	2.76	0.38	M8	1.18	0.59	5/8-18	4.90	3.68	5/8-11	2.87	0.63	2.41

DOC: FNW320A11 Ver. 01/2011

© 2011 - FNW. All rights reserved.
The FNW logo is a trademark of Ferguson Enterprises, Inc., PL Sourcing, PO Box 2778, Newport News, VA 23609

The contents of this publication are presented for information purposes only, and while effort has been made to ensure their accuracy, they are not to be construed as warranties or guarantees, expressed or implied, regarding the products or services described herein or their use or applicability. All sales are governed by our terms and conditions, which are available on request. We reserve the right to modify or improve the designs or specifications of our products at any time without notice. Always verify that you have the most recent product specifications or other documentation prior to the installation of these products.