2 PC FULL PORT 2000 CWP w/ ISO MOUNTING PAD

Features:

- 2000 PSI CWP* Non-Shock
- 150 PSI WSP
- Full Port
- Blow-out Proof Stem
- Live Loaded Packing
- Anti-static Design
- Investment Cast Body
- TFM (Super TFE) Seats
- Threaded NPT Ends
- Direct Mounting Pad
- Vacuum rated to 26.967"Hg (75 Torr)**
- Vented Ball
- Manufactured Silicone Free

Standards:

- Design: ASME B16.34, MSS SP-110
- End Connections: ASME B1.20.1
- Seat/Shell Test: MSS SP-110
- Mounting Pad: ISO 5211

* 1/4" to 1" - 2000 PSI CWP
1-1/4" to 3" - 1500 PSI CWP

** Vacuum measurements are often made in inches of mercury below atmospheric pressure. The values calculated here assume standard atmospheric pressure of 29.92 inches of mercury.

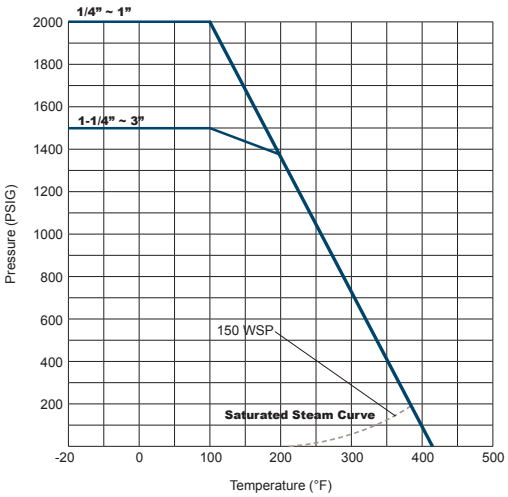

Cv, Torque & Weight

Size	Cv	Torque (in-lbs)	Wt (lbs)
1/4	15	69	1.19
3/8	15	69	1.21
1/2	18	77	1.34
3/4	36	98	1.81
1	48	166	3.06
1-1/4	58	277	3.79
1-1/2	120	388	6.11
2	190	582	10.03
2-1/2	450	897	16.20
3	600	1546	29.98

Figure Number Matrix

FNW 220AM Size

SIZE CODE

1/4 = B	1-1/4 = H
3/8 = C	1-1/2 = J
1/2 = D	2 = K
3/4 = F	2-1/2 = L
1 = F	3 = M

2 PC FULL PORT 2000 CWP w/ ISO MOUNTING PAD

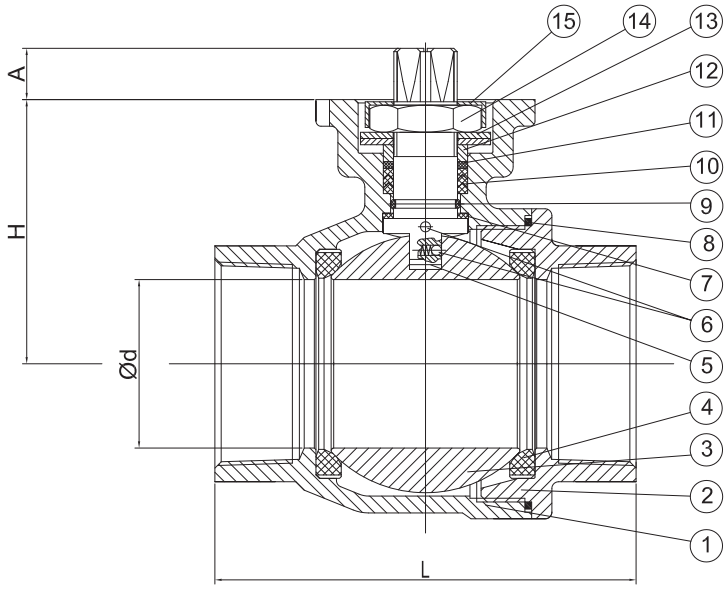

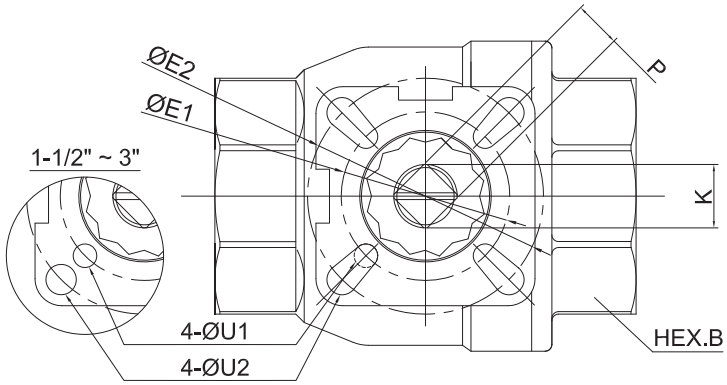

Standard Materials

Ref. No.	Description	Material	Qty
1	Body	ASTM A351 Gr. CF8M Stainless	1
2	End Cap	ASTM A351 Gr. CF8M Stainless	1
3	Ball	316SS Stainless	1
4	Seat	TFM1600+20%GF	2
5	Stem	316SS Stainless	1
6	Anti-Static Device	316SS Stainless	2
7	Thrust Washer	TFM4215	1
8	Body Gasket	PTFE	1
9	O-Ring	FKM	1
10	V-Ring Packing	PTFE	1 Set
11	Bushing	50% SS + 50% PTFE	1
12	Gland	316SS Stainless	1
13	Belleville Washer	301SS Stainless	2
14	Stem Nut	ASTM A194-8 Stainless	1
15	Stop-Lock-Cap	304SS Stainless	1

Dimensions (inches)

SIZE	Ød	L	H	ØE1	ØE2	ØU1	ØU2	P	A	ISO 5211	K (UNF)	B
1/4	0.42	2.44	1.70	1.42	1.65	0.24	0.24	0.35	0.35	F03/F04	7/16-20	1.06
3/8	0.50	2.44	1.70	1.42	1.65	0.24	0.24	0.35	0.35	F03/F04	7/16-20	1.06
1/2	0.59	2.95	1.70	1.42	1.65	0.24	0.24	0.35	0.35	F03/F04	7/16-20	1.06
3/4	0.79	3.15	2.00	1.42	1.97	0.24	0.28	0.35	0.35	F03/F05	7/16-20	1.26
1	0.98	3.54	2.28	1.65	1.97	0.24	0.28	0.43	0.43	F04/F05	9/16-18	1.61
1-1/4	1.26	4.33	2.48	1.65	1.97	0.24	0.28	0.43	0.43	F04/F05	9/16-18	1.97
1-1/2	1.50	4.72	2.91	1.97	2.76	0.28	0.35	0.55	0.55	F05/F07	3/4-16	2.20
2	1.97	5.51	3.27	1.97	2.76	0.28	0.35	0.55	0.55	F05/F07	3/4-16	2.76
2-1/2	2.50	7.28	4.03	2.76	4.02	0.33	0.41	0.67	0.67	F07/F10	7/8-14	3.54
3	2.99	8.07	4.36	2.76	4.02	0.33	0.41	0.67	0.67	F07/F10	7/8-14	4.02

DOC: FNW220AM11 Ver. 01/2011

© 2011 - FNW. All rights reserved.
The FNW logo is a trademark of Ferguson Enterprises, Inc., PL Sourcing, PO Box 2778, Newport News, VA 23609

The contents of this publication are presented for information purposes only, and while effort has been made to ensure their accuracy, they are not to be construed as warranties or guarantees, expressed or implied, regarding the products or services described herein or their use or applicability. All sales are governed by our terms and conditions, which are available on request. We reserve the right to modify or improve the designs or specifications of our products at any time without notice. Always verify that you have the most recent product specifications or other documentation prior to the installation of these products.