2 PC FULL PORT 2000 CWP

Features:

- 2000 PSI CWP* Non-Shock
- Working Steam Pressure (WSP)
  - 150 PSI - Fig. 220A
  - 250 PSI - Fig. 220AC
- Full Port
- Blow-out Proof Stem
- Adjustable Packing
- Anti-static Design
- Investment Cast Body
- TFM (Super TFE) Seats
- Threaded NPT Ends
- Stainless Steel Handle
- Locking Lever
- Tapped Hole Mounting Pad
- Vented Ball
- Manufactured Silicone Free

Standards:

- Design: ASME B16.34, MSS SP-110
- End Connections: ASME B1.20.1
- Seat/Shell Test: MSS SP-110

* 1/4" to 1" - 2000 PSI CWP
1-1/4" to 2" - 1500 PSI CWP
2-1/2" to 3" - 1000 PSI CWP

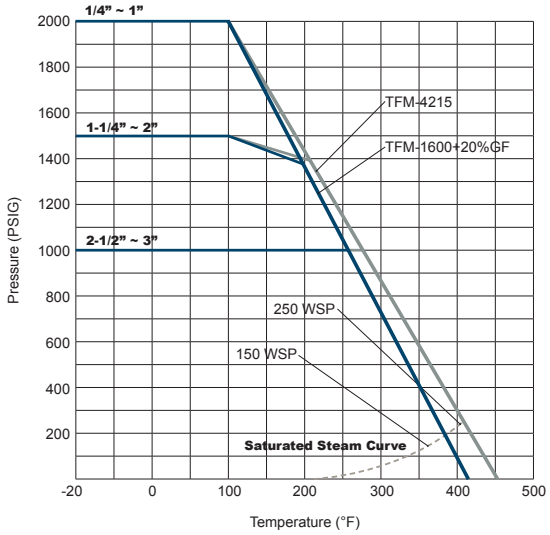

Cv, Torque & Weight

Size	Cv	Torque (in-lbs)	Wt (lbs)
1/4	15	69	1.15
3/8	15	69	1.15
1/2	18	77	1.15
3/4	36	98	1.72
1	48	166	1.90
1-1/4	58	277	3.53
1-1/2	120	388	6.00
2	190	582	9.17
2-1/2	450	816	15.43
3	600	1395	19.18

Figure Number Matrix

FNW 220A Seat/Seals Size

SEAT/SEAL CODE
Blank = Standard Temp (150 WSP)
C = High Temp (250 WSP)

SIZE CODE

1/4 = B	1-1/4 = H
3/8 = C	1-1/2 = J
1/2 = D	2 = K
3/4 = F	2-1/2 = L
1 = F	3 = M

2 PC FULL PORT 2000 CWP

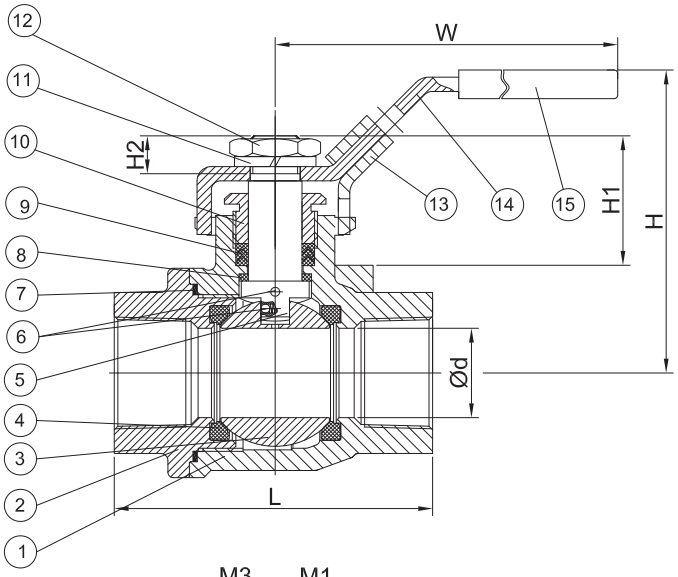

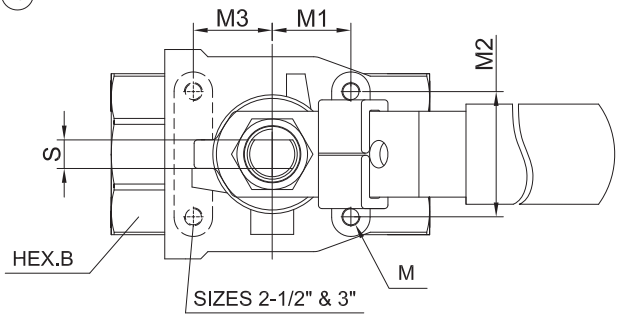

Standard Materials

Ref. No.	Description	Material		Qty
		Figure 220A	Figure 220AC	
1	Body	ASTM A351 Gr. CF8M Stainless		1
2	End Cap	ASTM A351 Gr. CF8M Stainless		1
3	Ball	316SS Stainless		1
4	Seat	TFM1600+20%GF	TFM4215	2
5	Stem	316SS Stainless		1
6	Anti-Static Device	316SS Stainless		2
7	Body Gasket	PTFE	PTFE + 20% CF	1
8	Thrust Washer	TFM4215		1
9	V-Ring Packing	PTFE	TFM1600	1 Set
10	Gland Nut	304SS Stainless		1
11	Handle Washer	304SS Stainless		1
12	Handle Nut	304SS Stainless		1
13	Locking Pad	304SS Stainless		1
14	Handle	304SS Stainless		1
15	Handle Cover	Vinyl Plastic		1

Dimensions (inches)

SIZE	Ød	L	H1	H2	H	W	S	M1	M3	M2	M (UNC)	B
1/4	0.42	2.17	1.34	0.40	2.52	3.74	0.314	0.50		1.12	10-24	1.06
3/8	0.50	2.17	1.34	0.40	2.52	3.74	0.314	0.50		1.12	10-24	1.06
1/2	0.59	2.55	1.34	0.40	2.52	4.92	0.314	0.50		1.12	10-24	1.06
3/4	0.79	3.03	1.52	0.43	2.64	4.92	0.314	0.88		1.38	10-24	1.26
1	0.98	3.46	1.46	0.42	3.27	5.51	0.314	0.88		1.38	10-24	1.61
1-1/4	1.26	4.01	2.09	0.83	3.50	5.51	0.314	1.00		1.50	1/4-20	1.97
1-1/2	1.50	4.33	2.44	1.12	3.93	7.87	0.472	1.00		1.50	1/4-20	2.20
2	1.97	4.92	2.36	1.09	4.25	7.87	0.472	1.00		1.50	1/4-20	2.76
2-1/2	2.50	6.45	2.24	0.93	5.91	9.84	0.472	1.18	1.38	2.76	1/4-20	3.27
3	2.99	7.12	2.12	0.93	6.34	9.84	0.472	1.28	1.28	2.76	1/4-20	4.02

DOC: FNW220A11 Ver. 07/2011

© 2011 - FNW. All rights reserved.
The FNW logo is a trademark of Ferguson Enterprises, Inc., PL Sourcing, PO Box 2778, Newport News, VA 23609

The contents of this publication are presented for information purposes only, and while effort has been made to ensure their accuracy, they are not to be construed as warranties or guarantees, expressed or implied, regarding the products or services described herein or their use or applicability. All sales are governed by our terms and conditions, which are available on request. We reserve the right to modify or improve the designs or specifications of our products at any time without notice. Always verify that you have the most recent product specifications or other documentation prior to the installation of these products.