3 PC SANITARY 400 CWP w/CLAMP ENDS

Features:

- 400 PSI CWP Non-Shock
- 150 PSI WSP
- Blow-out Proof Stem
- Live-Loaded Packing
- Anti-static Design
- Investment Cast Body
- Internal Polished Body & Ball Surface (Ra 32µin / 0.8µm)
- Double Stem Seal
- Cavity Filled TFM (Super TFE) Seat Design
- Clamp Ends
- Stainless Steel Handle
- Locking Lever
- Direct Mounting Pad
- Vacuum rated to 26.967"Hg (75 Torr)*
- Manufactured Silicone Free

Standards:

- Design: ASME B16.34, MSS SP-110
- End Connections: ASME BPE
- Seat/Shell Test: MSS SP-110
- Mounting Pad: ISO 5211
- Face-To-Face: DIN 3202 Part 2 S13

* Vacuum measurements are often made in inches of mercury below atmospheric pressure. The values calculated here assume standard atmospheric pressure of 29.92 inches of mercury.

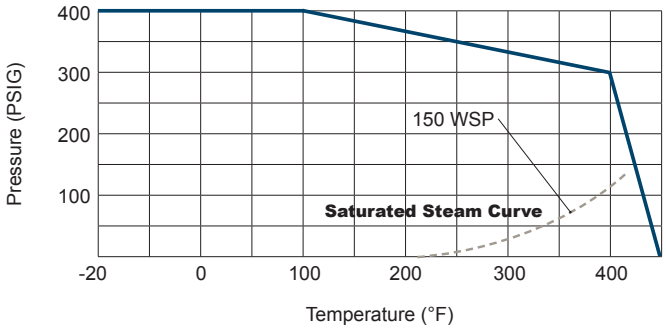

Cv, Torque & Weight

Size	Cv	Torque (in-lbs)	Wt (lbs)
1/2	16	58	1.28
3/4	18	69	2.27
1	48	121	3.17
1-1/2	120	254	6.56
2	190	368	9.92
2-1/2	450	565	18.47
3	600	933	26.12
4	1100	1416	51.37

Figure Number Matrix

FNW 330A Size

SIZE CODE

1/2 = D	1-1/2 = J	3 = M
3/4 = F	2 = K	4 = P
1 = G	2-1/2 = L	

Figure 330A
STAINLESS STEEL BALL VALVES

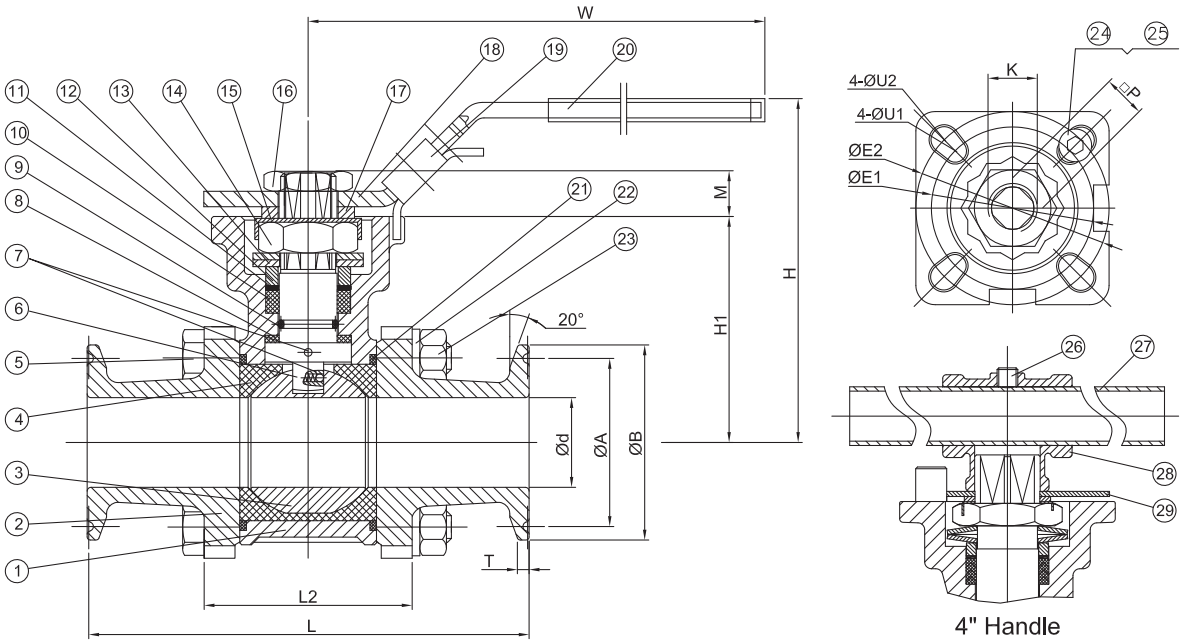

Dimensions (inches)

SIZE	Ød	L	H1	H	W	A	B	T	M	ØE1	ØE2	P	U1	U2	L2	K (UNF)
1/2	0.37	3.54	1.65	2.83	5.71	0.80	1.00	0.15	0.35	1.42	1.65	0.35	0.24	0.24	1.71	7/16-20
3/4	0.62	3.54	1.93	3.15	5.71	0.80	1.00	0.15	0.35	1.42	1.97	0.35	0.24	0.28	1.82	7/16-20
1	0.87	3.94	2.28	3.54	6.30	1.71	1.99	0.11	0.43	1.65	1.97	0.43	0.24	0.28	2.10	9/16-18
1-1/2	1.37	4.92	2.80	4.17	7.48	1.71	1.99	0.11	0.55	1.97	2.76	0.55	0.28	0.35	3.05	3/4-16
2	1.87	5.91	3.07	4.45	7.48	2.22	2.52	0.11	0.55	1.97	2.76	0.55	0.28	0.35	3.59	3/4-16
2-1/2	2.37	7.48	3.94	5.91	10.24	2.78	3.05	0.11	0.67	2.76	4.02	0.67	0.35	0.43	4.32	7/8-14
3	2.87	8.66	4.29	6.26	10.24	3.29	3.58	0.11	0.67	2.76	4.02	0.67	0.35	0.43	4.91	7/8-14
4	3.84	10.63	5.51	7.80	13.78	4.33	4.69	0.11	0.67		4.02	0.67		0.43	6.22	1-1/8-12

Standard Materials

Ref. No.	Description	Material	Qty
1	Body	ASTM A351 Gr. CF8M Stainless	1
2	End Cap	ASTM A351 Gr. CF8M Stainless	2
3	Ball	316SS Stainless	1
4	Seat	TFM1600	2
5	Body Bolt	ASTM A193-B8 Stainless	4
6	Stem	316SS Stainless	1
7	Anti-Static Device	316SS Stainless	2
8	Thrust Washer	PTFE	1
9	O-Ring	FKM	1
10	V-Ring Packing	PTFE	1 Set
11	Bushing	50% Stainless + 50% PTFE	1
12	Gland	316SS Stainless	1
13	Belleville Washer	301SS Stainless	2
14	Stem Nut	304SS Stainless	1
15	Stop-Lock-Cap	304SS Stainless	1

Ref. No.	Description	Material	Qty
16	Handle Nut	304SS Stainless	1
17	Square Washer	304SS Stainless	1
18	Handle	304SS Stainless	1
19	Lock Device	304SS Stainless	1
20	Handle Sleeve	Vinyl Plastic	1
21	Body Gasket	PTFE	2
22	Bolt Washer	304SS Stainless	4
23	Bolt Nut	304SS Stainless	4
24	Stop Bolt	304SS Stainless	1
25	Nut	304SS Stainless	1
26	Set Screw (4" only)	304SS Stainless	1
27	Handle (4" only)	ASTM A53 Steel + Zinc Plating	1
28	Adapter (4" only)	304SS Stainless	1
29	Stopper (4" only)	420SS Stainless	1

DOC: FNW330A11 Ver. 07/2011

© 2011 - FNW. All rights reserved.
The FNW logo is a trademark of Ferguson Enterprises, Inc., PL Sourcing, PO Box 2778, Newport News, VA 23609

The contents of this publication are presented for information purposes only, and while effort has been made to ensure their accuracy, they are not to be construed as warranties or guarantees, expressed or implied, regarding the products or services described herein or their use or applicability. All sales are governed by our terms and conditions, which are available on request. We reserve the right to modify or improve the designs or specifications of our products at any time without notice. Always verify that you have the most recent product specifications or other documentation prior to the installation of these products.