3-WAY DIVERTER
STANDARD PORT 1000 CWP

Features:

- 1000 PSI CWP Non-Shock
- 150 PSI WSP
- Standard Port
- Blow-out Proof Stem
- Live Loaded Packing
- Anti-static Design
- Investment Cast Body
- Four Seat Design
- RTFE Seats
- Threaded NPT Ends
- Stainless Steel Handle
- Locking Lever
- Direct Mounting Pad
- Vacuum rated to 26.967"Hg (75 Torr)*
- Manufactured Silicone Free

Standards:

- Design: ASME B16.34, MSS SP-110
- End Connections: ASME B1.20.1
- Seat/Shell Test: MSS SP-110
- Mounting Pad: ISO 5211

* Vacuum measurements are often made in inches of mercury below atmospheric pressure. The values calculated here assume standard atmospheric pressure of 29.92 inches of mercury.

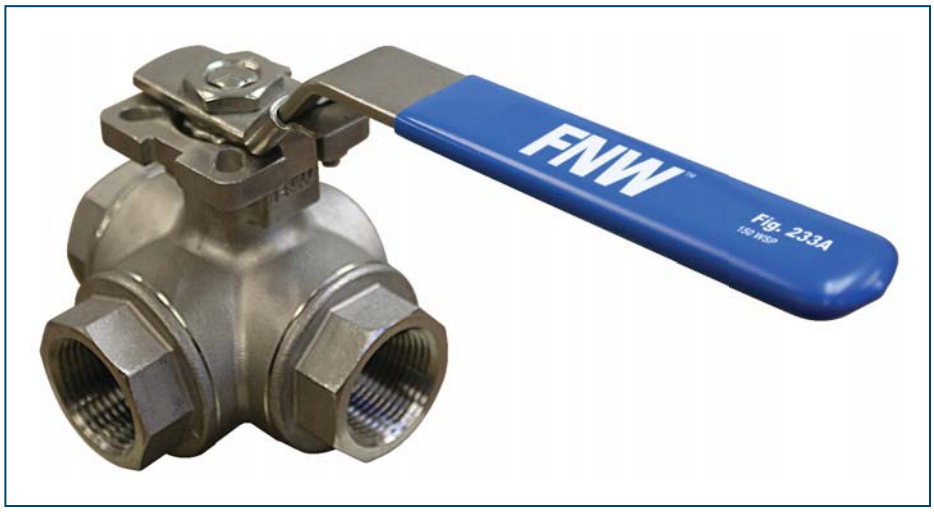

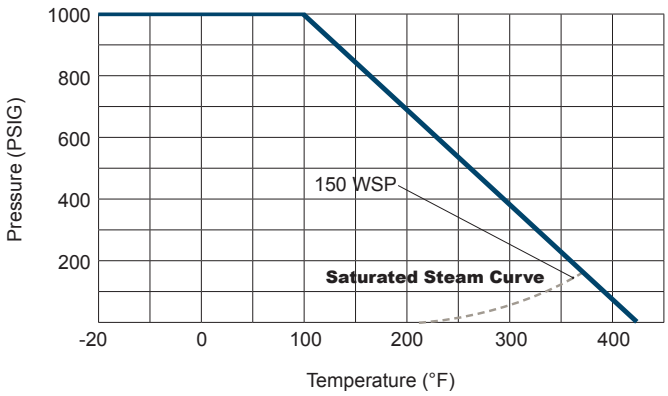

Cv, Torque & Weight

Size	Cv	Torque (in-lbs)	Wt (lbs)
1/2	15	66	1.74
3/4	18	80	2.47
1	36	146	4.10
1-1/4	45	252	6.64
1-1/2	72	344	9.39
2	120	503	15.65

Figure Number Matrix

FNW 233A Size

SIZE CODE

1/2 = D	1-1/4 = H
3/4 = F	1-1/2 = J
1 = G	2 = K

3-WAY DIVERTER
STANDARD PORT 1000 CWP

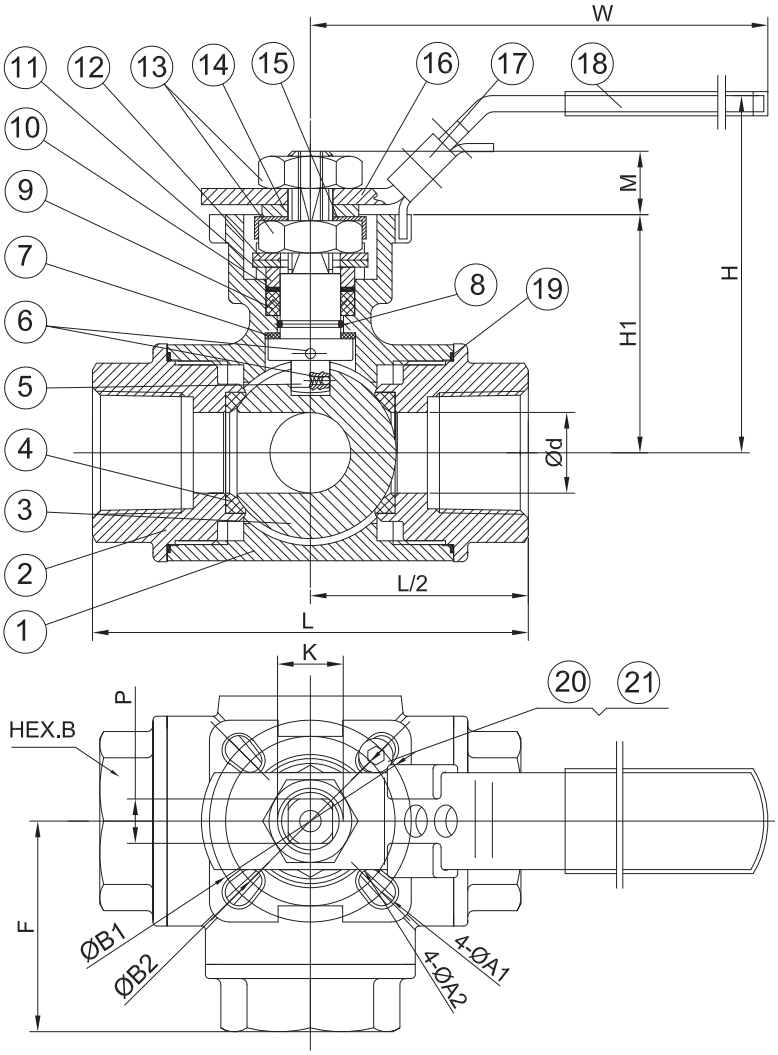

Standard Materials

Ref. No.	Description	Material	Qty
1	Body	ASTM A351 Gr. CF8M Stainless	1
2	End Cap	ASTM A351 Gr. CF8M Stainless	3
3	Ball	316SS Stainless	1
4	Seat	RTFE	4
5	Stem	316SS Stainless	1
6	Anti-Static Device	316SS Stainless	2
7	Thrust Washer	PTFE	1
8	O-Ring	FKM	1
9	V-Ring Packing	PTFE	1 Set
10	Bushing	50% Stainless + 50% PTFE	1
11	Gland	316SS Stainless	1
12	Belleville Washer	301SS Stainless	2
13	Stem Nut	ASTM A194-8 Stainless	2
14	Handle Gland	304SS Stainless	1
15	Stop-Lock-Cap	304SS Stainless	1
16	Handle	304SS Stainless	1
17	Lock Device	304SS Stainless	1
18	Handle Sleeve	Vinyl Plastic	1
19	Body Gasket	PTFE	3
20	Stop Bolt	ASTM A193-B8 Stainless	1
21	Stop Nut	ASTM A194-8 Stainless	1

90° L-PORT PATTERN

FLOW PLAN A

Dimensions (inches)

SIZE	Ød	L	H1	H	M	W	ØB1	ØB2	ØA1	ØA2	F	P	ISO 5211	K (UNF)	B
1/2	0.43	3.11	1.65	2.76	0.35	5.79	1.65	1.42	0.24	0.24	1.56	0.35	F03/F04	7/16-20	1.06
3/4	0.59	3.46	1.93	3.03	0.35	5.79	1.97	1.42	0.28	0.24	1.73	0.35	F03/F05	7/16-20	1.34
1	0.79	4.25	2.34	3.43	0.43	6.95	1.97	1.65	0.28	0.24	2.13	0.43	F04/F05	9/16-18	1.61
1-1/4	0.98	4.88	2.48	3.66	0.43	6.95	2.76	1.65	0.35	0.24	2.44	0.43	F04/F07	9/16-18	1.97
1-1/2	1.26	5.31	2.89	4.06	0.55	8.46	2.76	1.97	0.35	0.28	2.66	0.55	F05/F07	3/4-16	2.20
2	1.57	6.46	3.26	4.45	0.55	8.46	2.76	1.97	0.35	0.28	3.23	0.55	F05/F07	3/4-16	2.76

DOC: FNW233A11 Ver. 01/2011

© 2011 - FNW. All rights reserved.
The FNW logo is a trademark of Ferguson Enterprises, Inc., PL Sourcing, PO Box 2778, Newport News, VA 23609

The contents of this publication are presented for information purposes only, and while effort has been made to ensure their accuracy, they are not to be construed as warranties or guarantees, expressed or implied, regarding the products or services described herein or their use or applicability. All sales are governed by our terms and conditions, which are available on request. We reserve the right to modify or improve the designs or specifications of our products at any time without notice. Always verify that you have the most recent product specifications or other documentation prior to the installation of these products.