Figure 200A
STAINLESS STEEL BALL VALVES

2 PC FULL PORT 1000 CWP

Features:

- 1000 PSI CWP Non-Shock
- 150 PSI WSP
- Full Port
- Blow-out Proof Stem
- Adjustable Packing
- Investment Cast Body
- Threaded NPT Ends
- Stainless Steel Handle
- Locking Lever
- RTFE Seats
- Vented Ball
- Manufactured Silicone Free

Standards:

- Design: ASME B16.34, MSS SP-110
- End Connections: ASME B1.20.1
- Seat/Shell Test: MSS SP-110

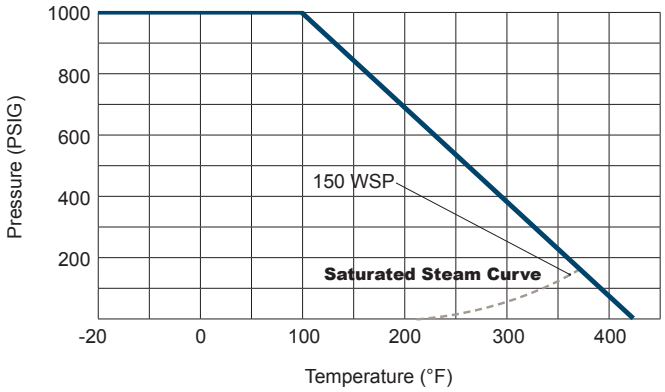

Cv, Torque & Weight

Size	Cv	Torque (in-lbs)	Wt (lbs)
1/4	15	60	0.73
3/8	15	60	0.68
1/2	18	66	0.75
3/4	36	80	1.14
1	48	146	1.94
1-1/4	58	252	2.82
1-1/2	120	344	4.12
2	190	503	6.48

Figure Number Matrix

FNW 200A Size

SIZE CODE

1/4 = B	1 = G
3/8 = C	1-1/4 = H
1/2 = D	1-1/2 = J
3/4 = F	2 = K

2 PC FULL PORT 1000 CWP

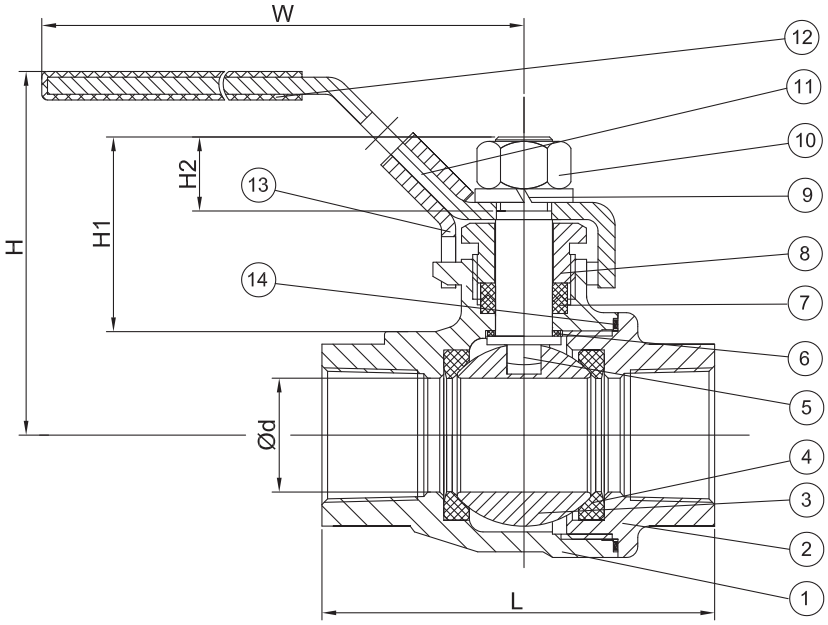

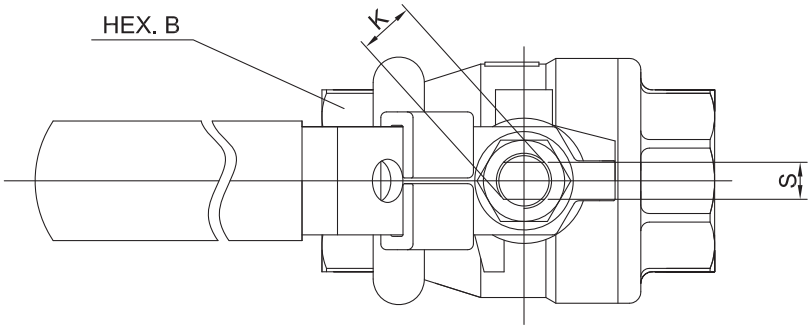

Dimensions (inches)

SIZE	Ød	L	H1	H2	H	W	K (UNC)	S	B
1/4	0.42	2.28	1.13	0.43	2.28	3.94	5/16-18	0.197	0.93
3/8	0.47	2.28	1.13	0.43	2.28	3.94	5/16-18	0.197	0.93
1/2	0.59	2.44	1.05	0.38	2.28	3.94	5/16-18	0.197	0.98
3/4	0.79	2.85	1.35	0.49	2.52	5.08	3/8-16	0.256	1.26
1	0.98	3.35	1.51	0.62	3.03	6.14	7/16-14	0.314	1.61
1-1/4	1.26	3.70	1.46	0.55	3.27	6.14	7/16-14	0.314	1.97
1-1/2	1.50	4.13	1.96	0.89	3.78	7.19	5/8-11	0.394	2.20
2	1.97	4.92	1.91	0.89	4.02	7.19	5/8-11	0.394	2.76

Standard Materials

Ref. No.	Description	Material	Qty
1	Body	ASTM A351 Gr. CF8M Stainless	1
2	End Cap	ASTM A351 Gr. CF8M Stainless	1
3	Ball	316SS Stainless	1
4	Seat	RTFE	2
5	Stem	316SS Stainless	1
6	Thrust Washer	PTFE	1
7	V-Ring Packing	PTFE	1 Set
8	Gland Nut	304SS Stainless	1
9	Stem Washer	304SS Stainless	1
10	Stem Nut	ASTM A194-8 Stainless	1
11	Handle	304SS Stainless	1
12	Handle Sleeve	Vinyl Plastic	1
13	Locking Device	304SS Stainless	1
14	Body Gasket	PTFE	1

DOC: FNW200A11 Ver. 01/2011

© 2011 - FNW. All rights reserved.
The FNW logo is a trademark of Ferguson Enterprises, Inc., PL Sourcing, PO Box 2778, Newport News, VA 23609

The contents of this publication are presented for information purposes only, and while effort has been made to ensure their accuracy, they are not to be construed as warranties or guarantees, expressed or implied, regarding the products or services described herein or their use or applicability. All sales are governed by our terms and conditions, which are available on request. We reserve the right to modify or improve the designs or specifications of our products at any time without notice. Always verify that you have the most recent product specifications or other documentation prior to the installation of these products.