Figure 311A
CARBON STEEL BALL VALVES

3 PC FULL PORT 1000 CWP

Features:

- 1000 PSI CWP Non-Shock
- 150 PSI WSP
- Full Port
- Blow-out Proof Stem
- Adjustable Packing
- Investment Cast Body
- End Connections
  - Threaded
  - Socket Weld
- Stainless Steel Handle
- Locking Lever
- RTFE Seats
- Vented Ball
- Manufactured Silicone Free

Standards:

- Design: ASME B16.34, MSS SP-110
- End Connections:
  - NPT - ASME B1.20.1
  - SW - ASME B16.11
- Seat/Shell Test: MSS SP-110

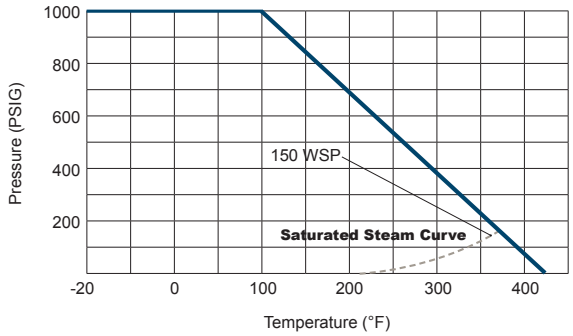

Cv, Torque & Weight

Size	Cv	Torque (in-lbs)	Wt (lbs)	
			NPT	SW
1/4	15	60	1.01	0.93
3/8	15	60	1.01	0.98
1/2	18	66	1.12	1.10
3/4	36	80	1.81	1.76
1	48	146	2.69	2.60
1-1/4	58	252	4.28	4.19
1-1/2	120	344	5.73	5.60
2	190	503	9.04	8.95
2-1/2	450	631	18.25	18.08
3	600	1337	25.57	25.88

Figure Number Matrix

FNW 311A Ends Size

END CODE	SIZE CODE	
Blank = Threaded NPT	1/4 = B	1-1/4 = H
SW = Socket Weld	3/8 = C	1-1/2 = J
	1/2 = D	2 = K
	3/4 = F	2-1/2 = L
	1 = G	3 = M

(For 4" valves, use FNW Figure number 311AM)

3 PC FULL PORT 1000 CWP

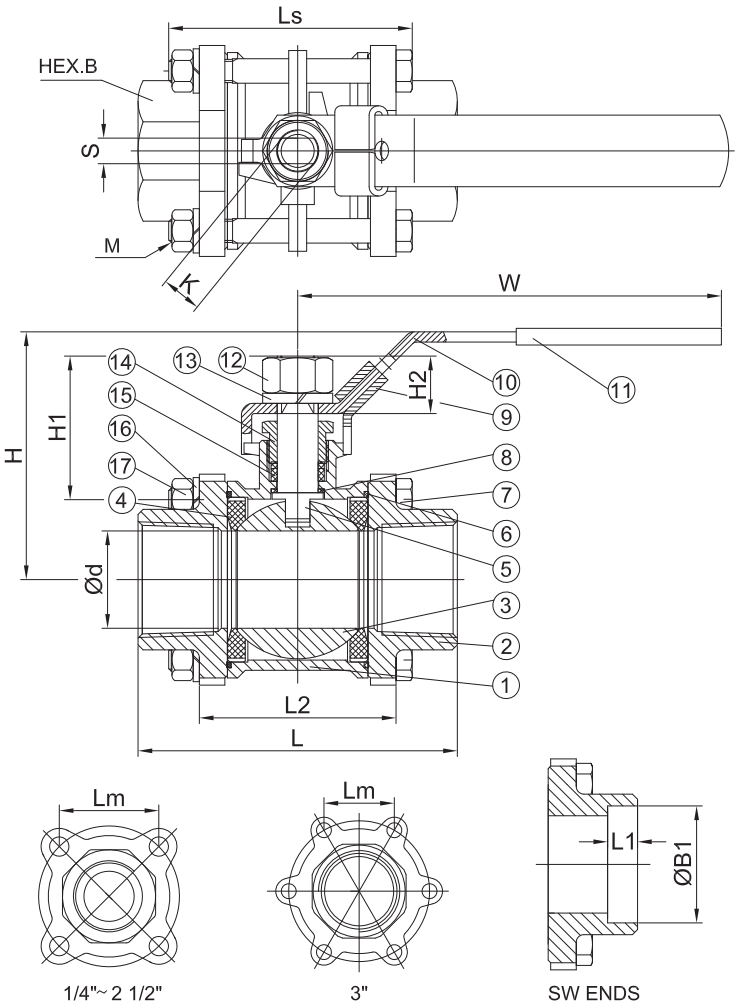

Standard Materials

Ref. No.	Description		Material	Qty
1	Body		ASTM A216 Gr. WCB Carbon Steel	1
2	End Cap		ASTM A216 Gr. WCB Carbon Steel	2
3	Ball		316SS Stainless	1
4	Seat		RTFE	2
5	Stem		316SS Stainless	1
6	Body Gasket		PTFE	2
7	Body Bolt	1/4"~2-1/2"	ASTM A193-B8 Stainless	4
		3"		6
8	Thrust Washer		PTFE	1
9	Locking Device		304SS Stainless	1
10	Handle		304SS Stainless	1
11	Handle Sleeve		Vinyl Plastic	1
12	Stem Nut		ASTM A194-8 Stainless	1
13	Stem Washer		304SS Stainless	1
14	Gland Nut		304SS Stainless	1
15	V-Ring Packing		PTFE	1 Set
16	Bolt Washer	1/4"~2"	SUS304 Stainless	4
		2-1/2"		8
		3"		12
17	Bolt Nut	1/4"~2"	ASTM A194-8 Stainless	4
		2-1/2"		8
		3"		12

Dimensions (inches)

SIZE	Ød	L	Lm	H1	H2	H	W	S	K (UNC)	Ls	L2	M (UNC)	B	L1	ØB1
1/4	0.42	2.57	1.14	1.20	0.43	2.26	3.94	0.197	5/16-18	1.98	1.46	1/4-20	0.93	0.39	0.56
3/8	0.50	2.57	1.14	1.20	0.43	2.26	3.94	0.197	5/16-18	1.98	1.46	1/4-20	0.93	0.39	0.69
1/2	0.59	2.74	1.21	1.11	0.38	2.26	3.94	0.197	5/16-18	2.13	1.63	1/4-20	1.10	0.39	0.86
3/4	0.79	3.15	1.52	1.30	0.49	2.50	5.08	0.256	3/8-16	2.44	1.82	5/16-18	1.36	0.51	1.07
1	0.98	3.54	1.76	1.61	0.62	2.97	6.14	0.314	7/16-14	2.79	2.10	5/16-18	1.65	0.51	1.34
1-1/4	1.26	4.33	2.13	1.61	0.55	3.19	6.14	0.314	7/16-14	3.37	2.68	3/8-16	2.05	0.63	1.69
1-1/2	1.50	4.72	2.42	2.12	0.89	3.70	7.19	0.394	5/8-11	3.81	3.05	3/8-16	2.30	0.63	1.93
2	1.97	5.51	2.95	2.19	0.89	4.11	7.19	0.394	5/8-11	4.36	3.59	3/8-16	2.81	0.67	2.42
2-1/2	2.50	7.28	3.62	2.69	0.93	5.16	9.92	0.472	3/4-10	5.75	4.36	9/16-12	3.41	0.67	2.91
3	2.99	8.07	2.93	2.75	0.93	5.47	9.92	0.472	3/4-10	6.34	4.93	9/16-12	3.98	0.67	3.54

DOC: FNW311A11 Ver. 01/2011

© 2011 - FNW. All rights reserved.
The FNW logo is a trademark of Ferguson Enterprises, Inc., PL Sourcing, PO Box 2778, Newport News, VA 23609

The contents of this publication are presented for information purposes only, and while effort has been made to ensure their accuracy, they are not to be construed as warranties or guarantees, expressed or implied, regarding the products or services described herein or their use or applicability. All sales are governed by our terms and conditions, which are available on request. We reserve the right to modify or improve the designs or specifications of our products at any time without notice. Always verify that you have the most recent product specifications or other documentation prior to the installation of these products.